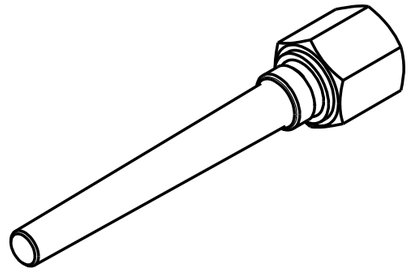

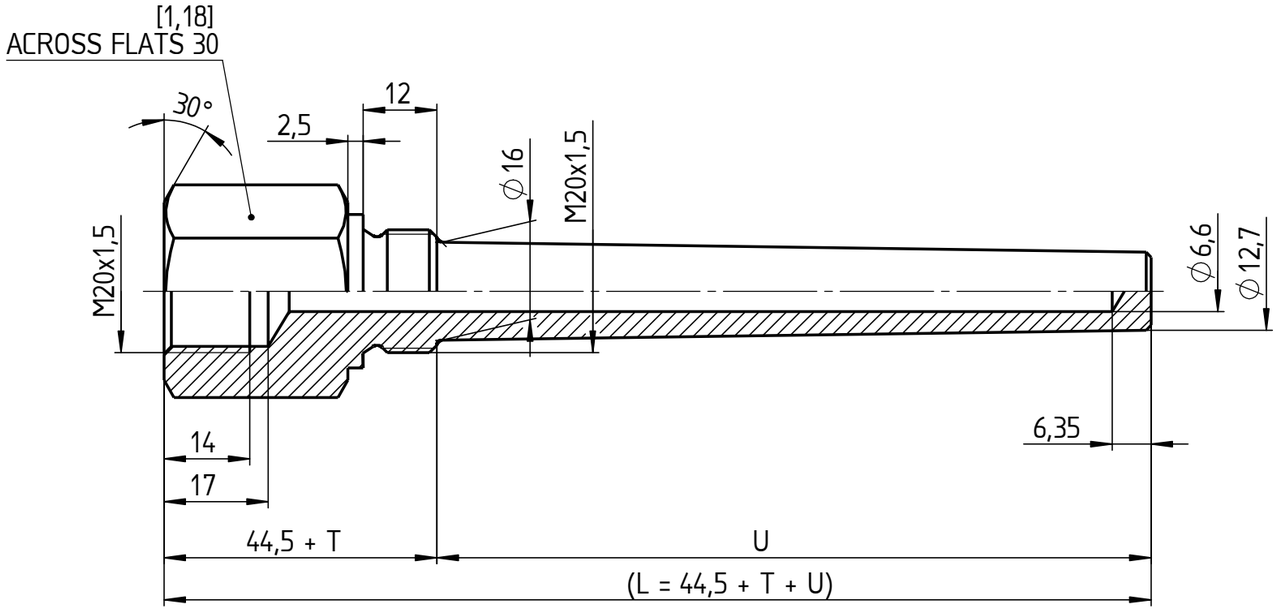

U-LENGTH (SPECIFY BY CUSTOMER)
T-LENGTH (SPECIFY BY CUSTOMER)
FOR L-LENGTH ≥ 1300 MM THE THERMOWELL WILL BE MANUFACTURED IN PIECES!

This drawing includes confidential information which is the property of ASHCROFT INC. This copy is loaned for a specific purpose, with the understanding that it will not be reproduced or used for any other purpose or disclosed to others, and it will be returned on demand.

	Date	Name
Drawn	28.08.20	J. Krott
Checked	28.08.20	

Rev.	Description	Date	Na.

ASHCROFT®

Dimensions in mm [inch]

General Dimension
Thermowell, HT, 260,
M20x1,5

DWG. NO.
B 076 I 2-HT-16-90-260

All specifications are subject to change without notice.